Rev.	Description	Date
01	Release for Production	08/01/2012

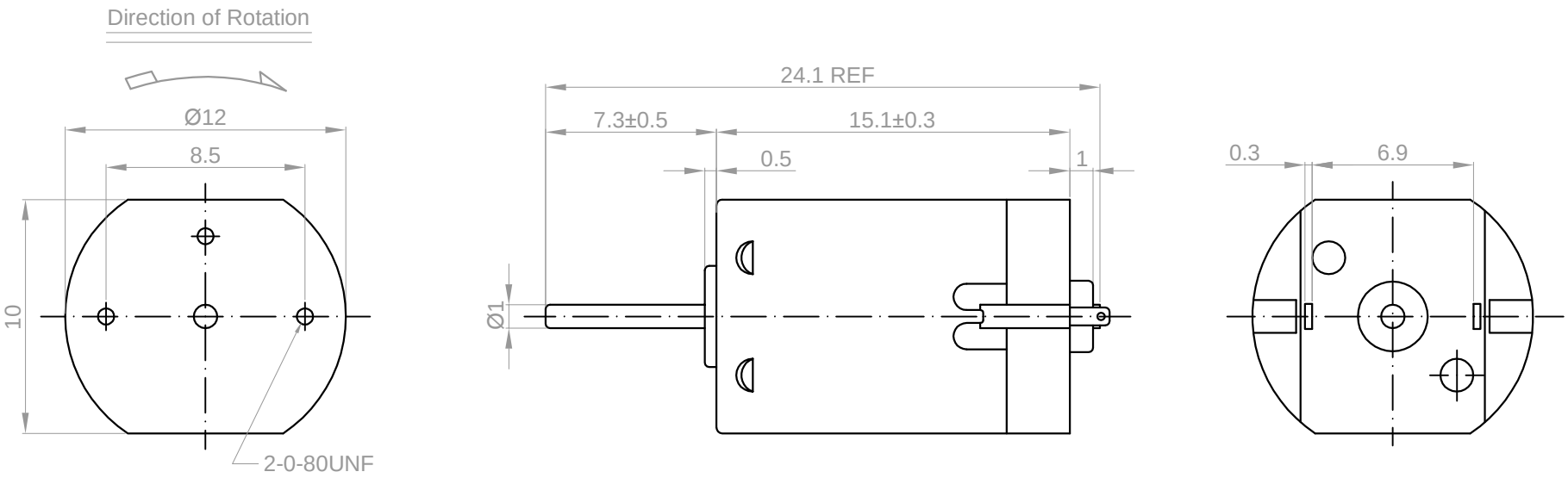

NO.	Item	Specification	NO.	Item	Specification
1	Rated Voltage	3.0 VDC	7	Starting Voltage	≤0.8 V
2	No Load Speed	13000 RPM±10%	8	Insulation Resistance	≥1.0 MΩ
3	No Load Current	0.075 A Max	9	Stall Torque	10 g.cm
4	Rated Torque	2.32 g.cm	10	Stall Current	0.55 A
5	Rated Current	≤0.25 A			
6	Rated Speed	9988 RPM±10%			

Drawn	Feny	08/01/2012
Checked	Sara	08/01/2012
Eng Appr.		
Mfg Appr.		
Q.A.		
SKU	1112091	

Kysan Electronics

www.kysanelectronics.com

info@kysanelectronics.com

Size A4	Weight(Kg):	Unit: mm
Scale: 8:1		Sheet1 of 1