Rev.	Revision	Date
01	Update	7/27/2011

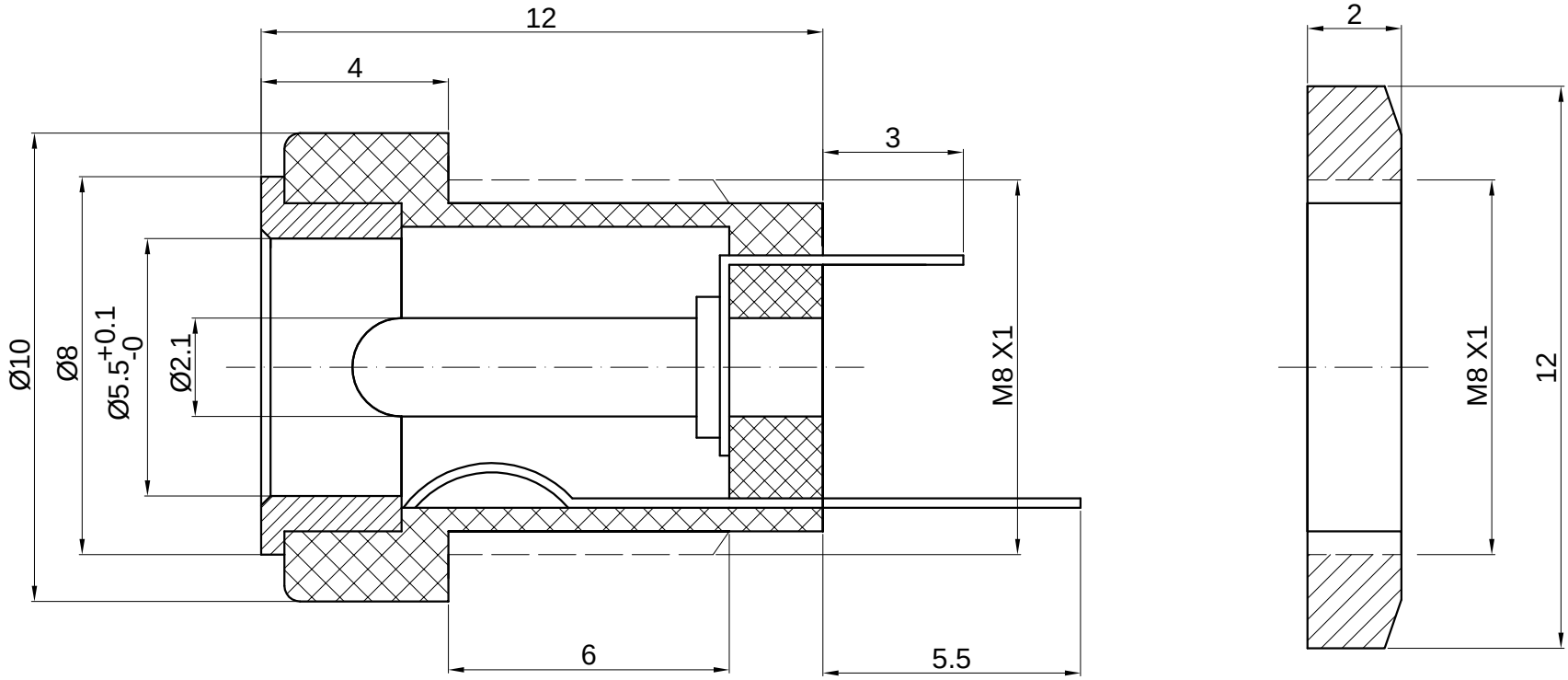

DRAWN	Amily	7/27/2011	UNIT: mm
CHECKED	Sara	7/27/2011	
ENG APPR.			Kysan Electronics
MFG APPR.			
Q.A.			

POWER-M2.1	SIZE A4	Kysan SKU 1230010	REV 01
	SCALE: 15:1	Weight(kg): 0.02	SHEET 1 OF 1