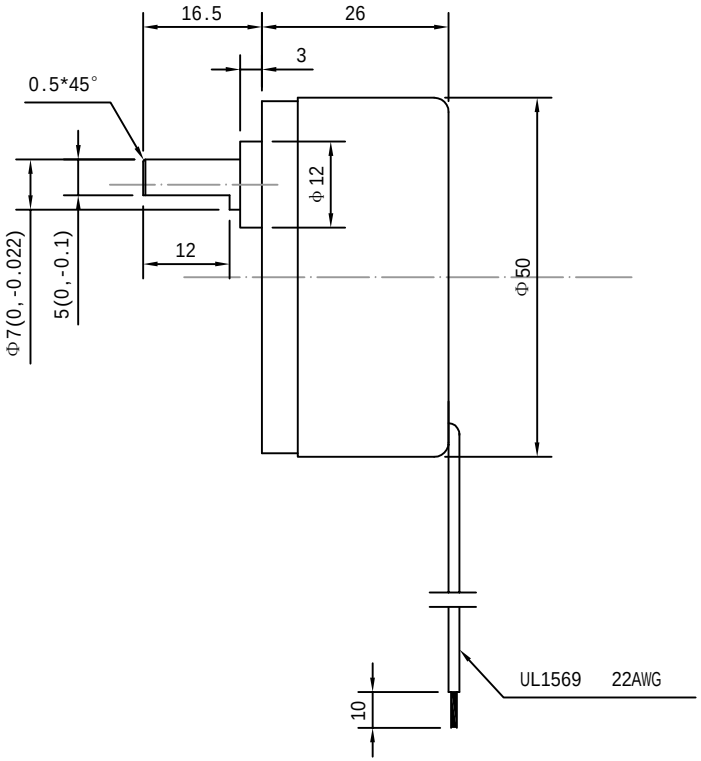

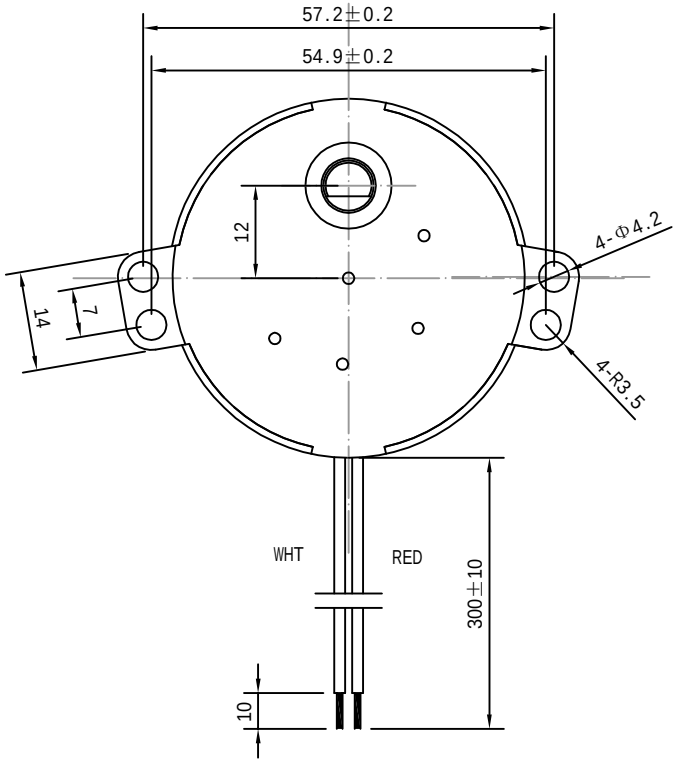

No.	Item	Specification	No.	Item	Specification
1	Rated Voltage	120V AC 50/60Hz	7		
2	Output Speed	33/40RPM	8		
3	Input Power	4/3.5W	9		
4	Input Current	≤50mA	10		
5	Rated Torque	1/0.8Kgf.cm	11		
6	Direction Of Rotation	CW/CCW/FREE			

Drawn	Bruce	04/26/2023	Unit: mm
Checked	Eva	04/26/2023	Kysan Electronics
Eng Appr.			www.kysanelectronics.com
Mfg Appr.			
Q.A.			
SKU: 1311202		Size :A4	Weight(Kg):
		Scale :	